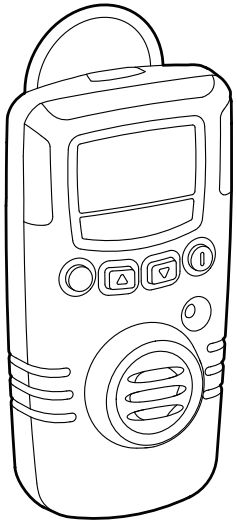

GasAlert EXTREME

Single Gas Detector

Wear yellow. Work safe.

50105442-061 EN-K2
[English]
© BW Technologies 2016. All rights reserved.

Quick Reference Guide

BW Technologies by Honeywell

Limited Warranty and Limitation Liability

BW Technologies LP (BW) warrants the product to be free from defects in material and workmanship under normal use and service for a period of two years, beginning on the date of shipment to the buyer. This warranty extends only to the sale of new and unused products to the original buyer. BW's warranty obligation is limited, at BW's option, to refund of the purchase price, repair or replacement of a defective product that is returned to a BW authorized service center within the warranty period. In no event shall BW's liability hereunder exceed the purchase price actually paid by the buyer for the Product.

This warranty does not include:

a) fuses, disposable batteries or the routine replacement of parts due to the normal wear and tear of the product arising from use;
b) any product which in BW's opinion, has been misused, altered, neglected or damaged, by accident or abnormal conditions of operation, handling or use;
c) any damage or defects attributable to repair of the product by any person other than an authorized dealer, or the installation of unapproved parts on the product; or

The obligations set forth in this warranty are conditional on:

a) proper storage, installation, calibration, use, maintenance and compliance with the product manual instructions and any other applicable recommendations of BW;
b) the buyer promptly notifying BW of any defect and, if required, promptly making the product available for correction. No goods shall be returned to BW until receipt by the buyer of shipping instructions from BW; and
c) the right of BW to require that the buyer provide proof of purchase such as the original invoice, bill of sale or packing slip to establish that the product is within the warranty period.

THE BUYER AGREES THAT THIS WARRANTY IS THE BUYER'S SOLE AND EXCLUSIVE REMEDY AND IS IN LIEU OF ALL OTHER WARRANTIES, EXPRESS OR IMPLIED, INCLUDING BUT NOT LIMITED TO ANY IMPLIED WARRANTY OF MERCHANTABILITY OR FITNESS FOR A PARTICULAR PURPOSE. BW SHALL NOT BE LIABLE FOR ANY SPECIAL, INDIRECT, INCIDENTAL, OR BASED ON CONTRACT, TORT OR RELIANCE OR ANY OTHER THEORY.

Since some countries or states do not allow limitation of the term of an implied warranty, or exclusion or limitation of incidental or consequential damages, the limitations and exclusions of this warranty may not apply to every buyer. If any provision of this warranty is held invalid or unenforceable by a court of competent jurisdiction, such holding will not affect the validity or enforceability of any other provision.

GasAlert Extreme

Introduction

This quick reference guide provides basic information to operate the GasAlert Extreme gas detector. For complete operating instructions, refer to the *GasAlert Extreme User Manual* provided on the CD-ROM. The GasAlert Extreme gas detector ("the detector") is designed to warn of hazardous gas levels above user defined alarm setpoints.

The detector is a personal safety device. It is your responsibility to respond properly to the alarm.

Note

If you have a multi-language detector, the detector is shipped with English as the default displayed language. Additional languages provided are French, German, Spanish, and Portuguese. The screens for the additional languages are displayed on the detector and in the corresponding quick reference guide.

Safety Information - Read First

Use the detector only as specified in this quick reference guide and user manual, otherwise the protection provided by the detector may be impaired.

Read the following **Cautions** before using the detector.

⚠ Cautions

- ***Warning:* Substitution of components may impair Intrinsic Safety.**
- ***Warning:* To prevent ignition of flammable or combustible atmospheres, disconnect power before servicing.**
- ***Warning:* Use only the Panasonic CR-2. Refer to Replacing the Battery or Sensor.**
- ***Warning:* To reduce the risk of ignition of a flammable atmosphere, batteries must only be changed in a safe area free of hazardous gas.**
- **Calibrate only in a safe area that is free of hazardous gas in an atmosphere of 20.9% oxygen.**
- **Use only a sensor specifically designed for the GasAlert Extreme model.**
- **Do not deactivate the detector during a work shift.**

Deactivating the detector resets the time-weighted average (TWA), short-term exposure limit (STEL), and maximum gas exposure values to 0.

- **If the detector is damaged or parts are missing, contact BW Technologies by Honeywell immediately.**
- **Do not use the detector if it is damaged. Before using the detector, inspect the case. Look for cracks and missing parts.**
- **If the detector has been disassembled, ensure the front and rear shells are properly aligned and fastened before activating the detector. Refer to Maintenance.**
- **BW recommends to bump test the sensor before each day's use to confirm its ability to respond to gas by exposing the detector to a gas concentration that exceeds the alarm setpoints. Manually verify that the audible and visual alarms are activated. For detectors with the calibration feature, calibrate the sensor if the reading is not within the specified limits.**
- **Calibrate the detector before first-time use, and then at least once every 180 days. For HCN detectors, calibrate once every 30 days.**
- **Ensure the sensor screen is not blocked.**
- **Do not cover the sensor grill with hands.**

To avoid possible damage to the detector, adhere to the following:

- **Do not expose the detector to electrical shock and/or severe continuous mechanical shock.**
- **The oxygen GasAlert Extreme detector is classified by Underwriters Laboratories Inc. up to an atmosphere of 21% oxygen.**
- **Do not attempt to disassemble, adjust, or service the detector unless instructions for that procedure are contained in the user manual, and/or that part is listed as a replacement part. Use only BW Technologies by Honeywell replacement parts. Refer to Replacement Parts and Accessories.**
- **The detector warranty will be voided if customer personnel or third parties damage the detector during repair attempts. Non-BW Technologies by Honeywell repair/service attempts void this warranty.**
- **Products may contain materials that are regulated for transportation under domestic and international dangerous goods regulations. Return product in compliance with appropriate dangerous goods regulations. Contact freight carrier for further instructions.**

Informations de sécurité – À lire au préalable

Utiliser le détecteur dans le seul but indiqué dans ce mémento et dans le manuel d'utilisation, sous peine de porter préjudice à la protection assurée par le détecteur.

Lire les **Mises en garde** suivantes avant d'utiliser le détecteur.

⚠ Mises en garde

- ***Avertissement :*** **Le remplacement d'un composant de l'appareil peut compromettre la sécurité intrinsèque du détecteur.**
- ***Avertissement :*** **Pour éviter l'inflammation d'atmosphères inflammables ou combustibles, couper l'alimentation électrique avant tout entretien.**
- ***Avertissement :*** **Utiliser uniquement des piles Panasonic CR-2. Se reporter à la section Replacing the Battery or Sensor.**
- ***Avertissement :*** **Pour réduire le risque d'ignition dans les atmosphères inflammables, les piles doivent être changées in a dans une zone sûre, exempte de gaz dangereux.**
- **Veillez à effectuer l'étalonnage dans une zone sûre, exempte de gaz dangereux, dans une atmosphère contenant 20,9 % d'oxygène.**
- **Utiliser uniquement les capteurs spécialement conçus pour le modèle GasAlert Extreme.**
- **Ne pas désactiver le détecteur au cours d'une période de travail. La désactivation du détecteur permet de remettre à zéro la moyenne pondérée dans le temps (TWA), la limite d'exposition à court terme (STEL) et les valeurs d'exposition maximale au gaz.**
- **Si le détecteur est endommagée ou que des pièces sont manquantes, contacter immédiatement BW Technologies by Honeywell.**
- **Ne pas utiliser le détecteur s'il est endommagé. Avant d'utiliser le détecteur, inspecter le boîtier. S'assurer qu'aucune pièce ne manque et vérifier l'absence de fissures.**
- **Si le détecteur a été démonté, s'assurer que les coques avant et arrière sont correctement alignées et serrées avant d'activer le détecteur. Se reporter à la section Maintenance.**
- **Avant chaque utilisation quotidienne, BW recommande d'effectuer un test fonctionnel du capteur afin de vérifier qu'il réagisse bien aux gaz présents, en exposant le détecteur à une concentration de gaz supérieure aux seuils d'alarme. Vérifier manuellement que les alarmes sonore et visuelle sont activées. Pour les détecteurs équipés de la fonction d'étalonnage, étalonner le capteur si la valeur ne respecte pas les limites spécifiées.**
- **Étalonner le détecteur avant sa première utilisation, puis une fois tous les 180 jours. Pour les détecteurs HCN, effectuer un étalonnage tous les 30 jours.**

- **Vérifier que le filtre du capteur n'est pas bouché.**
- **Ne pas couvrir la grille du capteur avec vos mains.**
- **Ne pas placer le détecteur près de la bouche ou des épaules.**

Pour éviter des dommages possibles sur le détecteur, respecter les consignes suivantes :

- **Ne pas soumettre le détecteur à des chocs électriques ni à d'importants chocs mécaniques continus.**
- **Le détecteur d'oxygène GasAlert Extreme est classé par l'organisme Underwriters Laboratories Inc. apte à une utilisation jusque dans une atmosphère de 21 % d'oxygène.**
- **Ne pas essayer de démonter, ajuster ou entretenir le détecteur à moins que des instructions soient spécifiées dans le manuel d'utilisation et/ou que la pièce en question soit répertoriée comme pièce de rechange. Utiliser des pièces de rechange BW Technologies by Honeywell uniquement. Se reporter à la rubrique Pièces de rechange et accessoires.**
- **La garantie du détecteur sera annulée si le personnel du client ou des tiers endommagent le détecteur lors d'une tentative de réparation. Les tentatives de réparation/entretien non effectuées par BW Technologies by Honeywell annulent la présente garantie.**
- **Les produits peuvent contenir des matériaux qui sont réglementés pour le transport en vertu des règlements nationaux et internationaux de marchandises dangereuses. Retourner le produit conformément à la réglementation sur les marchandises dangereuses appropriées. Contactez transporteur pour plus d'instructions.**

Parts of the GasAlert Extreme

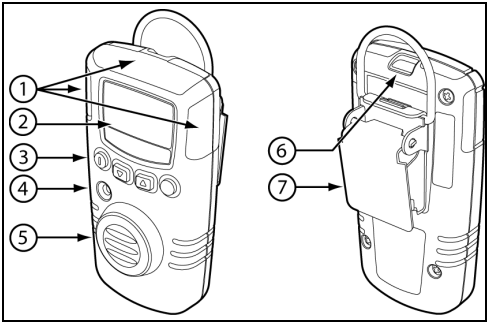

Item	Description
1	Visual alarms bars (LEDs)
2	Liquid crystal display (LCD)
3	Pushbuttons
4	Audible alarm
5	Sensor and sensor grill
6	Infrared (IR) communication port
7	Alligator clip

Display Elements

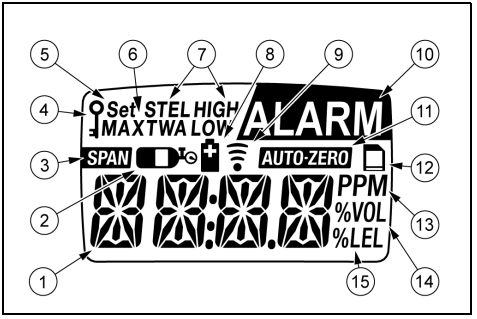

Note

Press and hold (until the backlight activates) any button to activate the backlight for 6 seconds. When the backlight option is enabled, the backlight automatically activates for 3 seconds whenever there is insufficient light to view the LCD. The detector is shipped with the backlight option enabled.

The backlight does not activate when stealth mode is enabled.

Item	Description
1	Numeric value
2	Gas cylinder
3	Automatic span sensor
4	Passcode lock
5	Set alarm setpoints and user options
6	Maximum gas exposure
7	Alarm conditions
8	Battery
9	Data transmission
10	Alarm or alarm setpoint
11	Automatically zero sensor
12	Optional datalogger indicator
13	Parts per million (ppm)
14	Percentage by volume (% vol.)
15	Percentage by lower explosive limit (% LEL) (future use)

Pushbuttons

Pushbutton	Description
ⓘ	• To activate the detector, press ⓘ. • To deactivate the detector, press ⓘ and hold for 5 seconds. • To enable/disable the confidence beep, while the detector is deactivated press and hold ◯. While holding ◯, press ⓘ to enable or disable the confidence beep during startup.
▼	• To decrement the displayed value or to scroll down, press ▼. • To enter the user options menu, press ▼ and ▲ simultaneously and hold until **OPTN** and then **EXIT** displays (5 seconds). • To initiate calibration and define alarm setpoints, press ▼ and ◯ simultaneously until **CAL.** displays.
▲	• To increment the displayed value or to scroll up, press ▲. • To view the TWA, STEL, and maximum gas exposures, press ▲ and ◯ simultaneously.
◯	• To save a displayed value, press ◯. • To clear TWA, STEL, and maximum gas exposures, press and hold ◯ for 6 seconds. • To acknowledge a latched alarm, press ◯.

Activating the Detector

To activate the detector, press ⓘ. Once the detector passes the self-test, the detector enters normal operation.

Deactivating the Detector

To deactivate the detector, press ⓘ and hold for 5 seconds.A deactivation passcode can be enabled to ensure only authorized deactivations occur. This option can only be enabled at the factory and must be specified at time of order, and cannot be disabled by the customer. Refer to the *GasAlert Extreme User Manual*.

Calibration

Procedure	Screen	Procedure	Screen
1. In a safe area free of hazardous gas and in an atmosphere of 20.9% oxygen, press ▼ and ◯ simultaneously and hold for 5 seconds. The detector beeps and vibrates four times. After **CAL.** displays on the LCD, the detector then beeps once more.	CAL.	5. When the LCD flashes ▮▮, attach the calibration cap and apply gas at a flow rate of 500 to 1000 ml/min. The detector beeps three times at the end of the span stage. Remove the calibration cap and close the valve on the gas cylinder.	SPAN ▮▮ 0 PPM
2. The LCD flashes **AUTO-ZERO** while the detector zeroes the sensor. The detector beeps twice at the end of auto-zero.	AUTO-ZERO 0 PPM	6. After a successful calibration, the LCD displays **CAL. DUE**. Press ▼ or ▲ to define the next calibration due date. Press ◯ to save.	Set 180
3. If the detector is passcode protected, **PASS** flashes on the LCD. The correct passcode must be entered before defining the calibration gas concentration.	Set PASS	7. Press ◯ to bypass defining the alarm setpoints. Or Press ▼ or ▲ to change the alarm setpoint and press ◯ to save the new value. The detector beeps and vibrates four times at the end of calibration.	Set TWA ALARM 35 PPM
4. The LCD displays the current calibration gas concentration. Press ◯ to accept the current concentration, or press ▼ or ▲ to change the concentration and press ◯ to confirm the new concentration.	Set SPAN 200 PPM	**⚠ Warning** **For correct flow and span rates, refer to the *GasAlert Extreme User Manual*.**	

Attach the Gas Cylinder to the Detector

Item	Description
1	Calibration cap
2	Hose
3	Regulator
4	Gas cylinder

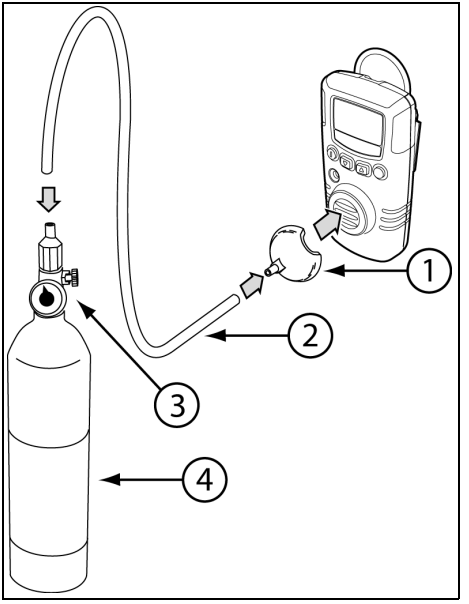

Alarms

Refer to the following table for information about alarms and corresponding screens. During an alarm condition, the detector activates the backlight and the LCD displays the current ambient gas reading.

Alarm	Screen	Alarm	Screen
Low Alarm • Slow beep • Slow flash • **ALARM** flashes • Slow vibrations	LOW ALARM 35 PPM	**TWA Alarm** • Slow beep • Slow flash • **ALARM** flashes • Slow vibrations	TWA ALARM 35 PPM
High Alarm • Fast beep • Fast flash • **ALARM** flashes • Fast vibrations	HIGH ALARM 200 PPM	**STEL Alarm** • Fast beep • Fast flash • **ALARM** flashes • Fast vibrations	STEL ALARM 200 PPM
Sensor Alarm • Slow beep • Slow flash • **ALARM** flashes • Slow vibrations	ALARM -- -- -- -- --	**Low Battery Alarm** • **Confidence beep disabled:** One beep and flash every 5 seconds and one quick vibration every minute **Confidence beep enabled:** Confidence beep deactivates. No beeps, flashes, or vibrations. • **LOW** displays	LOW 0 PPM

Alarm	Screen	Alarm	Screen
Automatic Shutdown Alarm (Low battery) • Eight beeps, flashes, and vibrations • **LOW** displays	LOW OFF	**Automatic Shutdown Alarm** (Calibration past) • Eight beeps, flashes, and vibrations	OFF
After Automatic Shutdown (Low battery) • No beep • No flash or vibrations • displays for a short time		**Confidence Beep** • One beep every 5 seconds • One quick vibration per minute *Note* *If the detector enters low battery alarm, the confidence beep deactivates.*	0 PPM

Note

High alarm and STEL alarm have the same priority. A high alarm and/or STEL alarm overrides a low alarm and/or TWA alarm. To check STEL and TWA alarms specifically, press and hold ◯ and ⏏ simultaneously.

The vibrator alarm is disabled at -20°C.

The high and low alarms deactivate when the gas concentration is lower than the low alarm setpoint. If the alarms are set to latch, alarms persist until the gas concentration is below the low alarm setpoint and the alarms have been acknowledged by pressing ◯. The TWA and STEL alarms deactivate by clearing the TWA and STEL peak exposure. Refer to the GasAlert Extreme User Manual *to clear TWA and STEL peak exposures.*

User Options Menu

Note

When selecting a user option, **Set** *flashes and the LCD displays the opposite of what is currently enabled.*

To access the user options menu, press and hold ▼ and ▲ simultaneously until the LCD displays **OPTN**.

To scroll through the options, press ▼ or ▲. Press ◯ to select the option. The following are the available user options:

- **EXIT:** Exits the user options menu.
- **CLCK** (Clock)**:** Define the date and time of the detector.
- **PASS** (Passcode)**:** Enable or disable passcode protection. Prevent unauthorized access to the user options menu, calibration, and defining alarm setpoints.
- **STLH** (Stealth)**:** Enable or disable stealth mode. This option disables the audible alarms, LEDs, and backlight. The vibrator alarm is disabled at -20°C.
- **BKLT** (Backlight)**:** Enable or disable the automatic backlight. When enabled, the backlight automatically activates for 3 seconds whenever there is insufficient light to view the LCD. When stealth mode is enabled, this option is not available.
- **LTCH** (Latching alarms): Enable or disable the latching alarm option. When enabled, the low and high gas alarms (audible, visual, and vibrator) persist until the gas concentration is below the low alarm setpoint and the alarms have been acknowledged by pressing ◯.
- **ACAL** (Automatic oxygen calibration)**:** Enable or disable automatic oxygen calibration at startup. Only applicable to the GasAlert Extreme oxygen detector.
- **PAST** (Calibration past due)**:** Enable or disable automatic shutdown if calibration is past due (at startup).
- **PORT**, **ESPA**, **DEUT**, **FRAN**, or **ENGL:** The LCD can display text in five different languages: Portuguese, Spanish, German, French, or English. Only applicable to detectors with the multi-language feature.
- **RATE** (Datalogger sampling rate option)**:** Adjust the datalogger sampling rate. Only applicable to detectors with the datalogger option.
- **SEND** (Data transfer)**:** Transfers the datalogs and event logs from the detector to the PC. Only applicable to detectors with the datalogger option.

  Information can be sent in the following three ways:

  EVNT (Event)**:** Sends all of the event logs.

  LAST: Sends all of the datalogs since the last time they were downloaded.

  ALL: Sends all of the datalogs saved on the detector.

Note

Confidence Beep is not enabled in the user options menu. To enable the confidence beep, while the detector is deactivated press and hold ◯. While holding ◯, press ⓘ. For more information refer to the GasAlert Extreme User Manual.

Maintenance

To keep the detector in good operating condition, perform the following basic maintenance as required:

- Calibrate, test, and inspect the detector at regular intervals.
- Keep an operations log of all maintenance, calibrations, and alarm events.
- Clean the exterior with a soft damp cloth. Do not use solvents, soaps, or polishes.
- Do not immerse the detector in liquids.

Replacing the Battery or Sensor

⚠ Warning

To avoid possible personal injury, adhere to the following:

- **Replace the battery in a safe area, free of hazardous gas immediately when the detector enters low battery alarm.**
- **Use only the Panasonic CR-2 battery.**
- **Wear an ESD wrist or heel strap when replacing the sensor or battery. Avoid touching electronic components on the detector PCB or shorting circuits on the PCB.**
- **Use only the sensor specifically designed for the GasAlert Extreme. Otherwise, the detector will not monitor the target gas. Refer to Replacement Parts and Accessories in the *GasAlert Extreme User Manual*.**
- **After replacing a sensor, allow the new sensor 5 minutes to stabilize before use. For an ETO or NO sensor, allow the new sensor 2 hours to stabilize before use.**
- **Do not expose a sensor to vapors of organic solvents such as paint fumes or organic solvents.**

Note

When the battery is removed from the detector, the clock reverts back to the default value. Refer to Clock Option in the GasAlert Extreme User Manual.

To preserve the life of the battery, deactivate the detector when not in use.

For additional information regarding problems caused by a sensor requiring calibration or replacement, refer to Troubleshooting in the *GasAlert Extreme User Manual*.

Replacing the Battery

To replace a battery, complete the following. Refer to Internal Parts of the GasAlert Extreme and Internal Seals of the GasAlert Extreme. Replace the battery in a safe area, free of hazardous gas.

1. Deactivate the detector.
2. Remove the four machine screws on the rear shell and remove the rear shell.
3. Remove the battery.

♻ Warning

This instrument contains a lithium battery. Do not mix with the solid waste stream. Spent batteries should be disposed of by a qualified recycler or hazardous materials handler.

4. Insert the new battery.
5. Re-assemble the detector. When assembling the detector be aware of the following:
   - Clean the seal on the front and rear shells with a soft damp clean cloth. Do not use solvents, soaps, or polishes. Refer to Internal Seals of the GasAlert Extreme.
   - Ensure the front and rear shells are properly aligned to ensure a proper environmental seal.
   - Torque the screws to 3-4 in-lbs in a crisscross pattern to ensure a proper environmental seal. Do not overtighten.

Replacing the Sensor

To replace a sensor, complete the following. Refer to Internal Parts of the GasAlert Extreme and Internal Seals of the GasAlert Extreme.

1. Deactivate the detector.
2. Remove the four machine screws on the rear shell and remove the rear shell.
3. Remove the two machine screws from the PCB.
4. Remove the PCB. Place the PCB on a clean, non-conductive surface.
5. Replace the sensor.

Note

Allow the new sensor 5 minutes to stabilize before use. For a new ETO or NO sensor, allow the new sensor 2 hours to stabilize before use.

6. Re-assemble the detector. When assembling the detector, perform the following:
   - Clean the seal on the front and rear shells with a soft damp clean cloth. Do not use solvents, soaps, or polishes. Refer to Internal Seals of the GasAlert Extreme.
   - Ensure the front and rear shells are properly aligned to ensure a proper environmental seal.
   - Torque the screws to 3-4 in-lbs in a crisscross pattern to ensure a proper environmental seal. Do not overtighten.

Cleaning a Sensor Screen

Clean or replace the sensor screen as required. If replacement sensor screens are required, refer to Replacement Parts and Accessories in the *GasAlert Extreme User Manual*.

To clean a removed sensor screen, complete the following. Refer to Internal Parts of the GasAlert Extreme and Internal Seals of the GasAlert Extreme.

1. Deactivate the detector.
2. Remove the four machine screws on the rear shell and remove the rear shell.
3. Remove the two machine screws from the PCB.

4. Remove the PCB. Place the PCB on a clean, non-conductive surface.
5. Remove the screen.
6. Using a soft, clean brush, wash the screen with clean, warm water.
7. Insert the sensor screen with the shiny side facing the sensor grill.

Note

Ensure the screen is dry before reinserting into the detector.

8. Re-assemble the detector. When assembling the detector be aware of the following:
   - When reinserting the sensor screen into the detector, ensure the sensor screen is inserted with the shiny side facing the sensor grill.
   - Clean the seal around the edge of the front and rear shells with a soft damp clean cloth. Do not use solvents, soaps, or polishes. Refer to Internal Seals of the GasAlert Extreme.
   - Ensure the front and rear shells are properly aligned to guarantee a proper environmental seal.
   - Torque the screws to 3-4 in-lbs in a crisscross pattern to ensure a proper environmental seal. Do not overtighten.

Internal Seals of the GasAlert Extreme

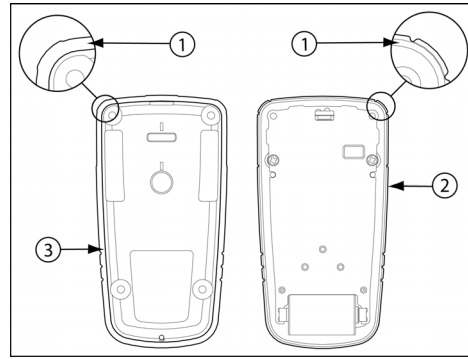

Item	Description
1	Seal
2	Front shell
3	Rear shell

Internal Parts of the GasAlert Extreme

Item	Description
1	Detector rear screws
2	Rear shell
3	Battery
4	Main PCB screws
5	Main PCB
6	Sensor
7	Sensor screen
8	Front shell

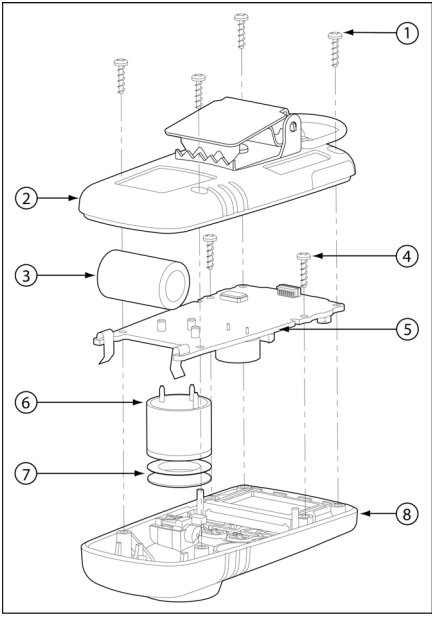

WEEE Directive and Battery Directive

Failure to comply with the following battery removal and disposal instructions may result in battery shorting, battery leakage, and/or other damage. Ensure a qualified technician completes the following procedures.

Removal and Disposal of the Battery

Only a qualified technician should complete the following procedure. Refer to Internal Parts of the GasAlert Extreme for parts of the detector.

Dispose of the battery according to local laws.

1. Press and hold ◯ to deactivate the detector.
2. Remove the four machine screws on the rear shell and remove the rear shell.
3. Remove the two machine screws from the PCB.
4. Remove the PCB. Place the PCB on a clean, non-conductive surface.
5. Remove the battery.
6. Dispose of the battery according to local laws.

Specifications

Instrument dimensions: 2.8 x 5.0 x 9.5 cm (1.1 x 2.0 x 3.75 in.)

Weight: 82 g (2.9 oz.)

Operating temperature:

H_2S, SO_2, HCN: -40°C to +50°C (-40°F to +122°F)
CO: -30°C to +50°C (-22°F to +122°F)
NH_3 (high range): -20°C to +40°C (-4°F to +104°F)
Other gases: -20°C to +50°C (-4°F to +122°F)

Operating humidity:

CO, H_2S, SO_2, Cl_2, HCN, NO_2, NH_3, PH_3, ETO, NO, O_3: 15% to 90% relative humidity (non-condensing)
Cl_2: 10% to 95% relative humidity (non-condensing)
ClO_2: 15% to 95% relative humidity (non-condensing)
O_2: 0% to 99% relative humidity (non-condensing)

Alarm setpoints: All setpoints automatically display during the start up self-test.

Detector ranges:

GasAlert Extreme O_2: 0-30.0% vol (0.1% vol increments)
GasAlert Extreme CO: 0-1000 ppm (1 ppm increments)
GasAlert Extreme CO: (low H_2): 0-1000 ppm (1 ppm increments)
GasAlert Extreme H_2S: 0-100 ppm (1 ppm increments)
GasAlert Extreme H_2S (high range): 0–500 ppm (1 ppm increments)
GasAlert Extreme PH_3: 0-5.0 ppm (0.1 ppm increments)

GasAlert Extreme SO_2: 0-150.0 ppm (0.1 ppm increments)

GasAlert Extreme Cl_2: 0-50.0 ppm (0.1 ppm increments)

GasAlert Extreme NH_3: 0-100 ppm (1 ppm increments)

GasAlert Extreme NH_3 (high range): 0-400 ppm (1 ppm increments)

GasAlert Extreme NO_2: 0-100.0 ppm (0.1 ppm increments)

GasAlert Extreme HCN: 0-30.0 ppm (0.1 ppm increments)

GasAlert Extreme ETO: 0-100.0 ppm (0.1 ppm increments)

GasAlert Extreme ClO_2: 0-1.00 ppm (0.01 ppm increments)

GasAlert Extreme O_3: 0-1.00 ppm (0.01 ppm increments)

GasAlert Extreme NO: 0-250 ppm (1 ppm increments)

Sensor type: Plug-in electrochemical cells

Calibration: Auto zero, set span, and span sensor

Oxygen sensor: Automatic span upon activation (enable/disable)

Alarm conditions: TWA alarm, STEL alarm, low alarm, high alarm, sensor alarm, low battery alarm, confidence beep, and automatic shutdown alarm.

Audible alarm: 95 dB at 1 ft. (0.3 m) typical

Visual alarm: Red light-emitting diode (LED)

Display: Alpha-numeric liquid crystal display (LCD)

Backlight: Automatically activates for 3 seconds whenever there is insufficient light to view the LCD and during alarm conditions (unless the backlight is disabled in user options). Any pushbutton reactivates the backlight for 6 seconds.

Self-test: Initiated at activation

User field options: automatic backlight, passcode protection, latching alarm, calibration due lock, language selection, enable/disable automatic oxygen calibration, datalog interval, data transfer option, confidence beep, calibration interval, stealth mode, set alarm setpoints, calibration span concentration

Year of manufacture: The detector's year of manufacture is determined from the serial number. The second and third number after the first letter determines the year of manufacture.

E.g. J4**10**-H001000 = 2010 year of manufacture

Battery test: Every 0.5-second

Battery: 3 V lithium Panasonic CR-2

Event logs: A maximum of 10 events are stored. When 10 events have been recorded, the next event overwrites the oldest event log.

Warranty: 2 years including sensors (1 year Cl_2, NH_3, O_3, ETO, and ClO_2 sensor)

Intrinsic Safety:

Classified by UL to both U.S. and Canadian Standards as intrinsically safe for Class I, Division 1, Group A, B, C, D and Class II, Group E, F, G

European Explosives Protection
CE 0539 Ex II 1G
Ex ia IIC T4 Ga DEMKO 04 ATEX 0336363X

IECEx Ex ia IIC T4 Ga IECEx UL 08.0001X

ABS Type Approved: VA-348-169-X

KTL 12-KB4BO-0199X[1]

EAC Ex Certificate: RU C-GB.ГБ05.B.01115

Inmetro: Ex ia IIC T4 Ga DNV 12.0137 X

Ratings and Certifications

The GasAlertExtreme is in conformity with the following standards:

UL 913 8th Edition
CSA C22.2 No. 157-92:2012

EN 60079-0:2012 +A11:2013

EN 60079-11:2012

IEC 60079-0:2011

IEC 60079-11:2011

This equipment has been tested and found to comply with the limits for a Class B digital device, pursuant to Part 15 of the FCC Rules and ICES-003 Canadian EMI requirements. These limits are designed to provide reasonable protection against harmful interference in a residential installation. This equipment generates, uses and can radiate radio frequency energy and, if not installed and used in accordance with the instructions, may cause harmful interference to radio communications. However, there is no guarantee that interference will not occur in a particular installation. If this equipment does cause harmful interference to radio or television reception, which can be determined by turning the equipment off and on, the user is encouraged to try to correct the interference by one or more of the following measures:

Reorient or relocate the receiving antenna.

Increase the separation between the equipment and receiver.

Connect the equipment into an outlet on a circuit different from that to which the receiver is connected.

Consult the dealer or an experienced radio/TV technician for help.